BOLT-ON EXTERNAL FALL ARREST SYSTEM
BOOM ACCESSORIES

WORK OUTSIDE THE PLATFORM AT HEIGHT

When your work requires you to exit the platform above elevation, JLG helps keep you safe and mobile with our Bolt-On External Fall Arrest System. This system uses a cable that allows the operator to leave the platform and move freely without detaching the safety harness. This helps keep the operator tethered to the platform at all times.

FEATURES AND BENEFITS:

- Available for a variety of boom lift applications, including aviation and steel erection
- Allows workers to walk a maximum of 6 ft beyond the platform
- Enhances worker protection
- Easily interchangeable between JLG machines
- Designed for many 36″ x 72″ and 36″ x 96″ wide platforms with the swing gate option

HOW TO CHOOSE YOUR BOLT-ON EXTERNAL FALL ARREST SYSTEM:

Refer to steps outlined in following pages

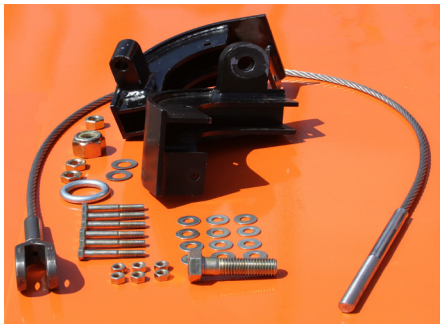

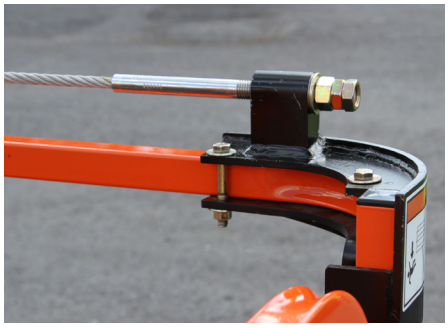

JLG INDUSTRIES, INC.
Toll-free US 877-JLG-LIFT
JLG.com

An Oshkosh Corporation Business

BOLT-ON EXTERNAL FALL ARREST SYSTEM
BOOM ACCESSORIES

STEP 1: BOLT-ON FALL ARREST AND MACHINE CAPABILITY IDENTIFICATION CHART

Refer to the chart below to determine if machine is capable of being fitted with a Bolt-On External Fall Arrest System.
If machine does not fall within the below serial number ranges, STOP, it cannot be optioned with a Bolt-On External Fall Arrest System

JLG MODEL	SERIAL BREAKS	
	36-IN X 72-IN (91-CM X 183-CM)	36-IN X 96-IN (91-CM X 244-CM)
400S, 460SJ	0300146621 TO PRESENT[3]	0300272174 TO PRESENT[3]
460SJ 1000-LB	ALL[3]	
400S HC3, 460SJ HC3	ALL	
E600, M600	0300188650 TO PRESENT[2]	NOT AVAILABLE
E600J, M600J	0300097060 TO PRESENT[2]	0300251813 TO PRESENT[2]
EC600SJ, H600SJ	0300168294 TO PRESENT	0300168294 TO PRESENT[3]
H800AJ	0300269946 TO PRESENT	0300269946 TO PRESENT
EC600SJP, H600SJP	0300168294 TO PRESENT	NOT AVAILABLE
600A, 600AJ (8ft. chassis only)	0300128330 TO PRESENT	0300080181 TO PRESENT
600AJ HC3	ALL	
600S, 600SJ, 660SJ	0300125318 TO 0300272507[2]	0300080179 TO 0300272507[2]
	0300272507 TO PRESENT	0300272507 TO PRESENT
660SJ 1000-LB	ALL3	
600S HC3, 660SJ HC3	ALL	
670SJ SL	ALL	
800A, 800AJ	0300128364 TO 03002725902	0300080176 TO 03002725902
	0300272590 TO PRESENT	0300272590 TO PRESENT
800AJ HC3	ALL	
800S, 860SJ	0300128362 TO 0300162810[2]	0300080174 TO 0300162810[2]
	0300162810 TO 0300182743 (Contact JLG Parts)[2]	
	0300182743 TO PRESENT[2]	0300182743 TO PRESENT[2]
800S HC3, 860SJ HC3	ALL	
810SJ	ALL[2]	
1200SJP, 1350SJP	0300080177 TO PRESENT[1]	0300080177 TO PRESENT[1]
	0300147130 TO PRESENT[2]	0300147130 TO PRESENT[2]
1250AJP	0300138710 TO PRESENT[2]	0300138710 TO PRESENT[2]
1500AJP	ALL[2]	
1500SJ	ALL[2]	
1850SJ	ALL[2]	

Prohibited Options/Items:

- Four Corner Platform Lights
- Pipe Racks
- SkyGlazier
- Platform Mesh to Mid Rail
- Platform Mesh to Top Rail
- Soft Touch
- Platform Top Rail Extension

Note: Kits applicable in ANSI, ANSI Export, CSA, Japan, Australia and China specification regions unless otherwise noted.
[1] ANSI specification region only
[2] ANSI, ANSI Export Spec, CSA, Japan and China specifications
[3] ANSI, ANSI Export Spec, CSA, Australia and China specifications only

PROCEED TO STEP 2 >>>

ORDER TODAY | onlineexpress.jlg.com | Parts@jlg.com

PN 401003 | R0926_01

JLG INDUSTRIES, INC.
Toll-free US 877-JLG-LIFT
JLG.com
An Oshkosh Corporation Business

BOLT-ON EXTERNAL FALL ARREST SYSTEM
BOOM ACCESSORIES

STEP 1: BOLT-ON FALL ARREST AND MACHINE CAPABILITY IDENTIFICATION CHART

Refer to the chart below to determine if machine is capable of being fitted with a Bolt-On External Fall Arrest System.

If machine does not fall within the below serial number ranges, STOP, it cannot be optioned with a Bolt-On External Fall Arrest System

MODEL	SERIAL NUMBER		
	30-IN X 48-IN (76-CM X 121-CM)	30-IN X 60-IN (76-CM X 152-CM)	30-IN X 72-IN (76-CM X 183-CM)
E450A/AJ	0300272674 TO PRESENT[3]	0300272674 TO PRESENT[3]	N/A
E600, EC/H600	0300138701 TO PRESENT[3]	N/A	0300138701 TO PRESENT[3]
EC600SJ, H600SJ, EC600SJP, H600SJP	0300168294 TO PRESENT[3]	N/A	0300168294 TO PRESENT[3]
H800AJ	0300269946 TO PRESENT[3]	N/A	0300269946 TO PRESENT[3]
400S, 460SJ	N/A	0300100554 TO PRESENT	N/A
460SJ 1000-LB	N/A	ALL[3]	N/A
400S HC3, 460SJ HC3	N/A	ALL[3]	N/A
400SC, 460SJC	N/A	ALL[3]	N/A
450A/AJ	0300272185 TO PRESENT3	0300272185 TO PRESENT3	N/A
450AJ HC3	ALL[3]	ALL3	N/A
600A/AJ	0300105048 TO PRESENT[3]	0300105048 TO PRESENT[3]	N/A
600AJ HC3	ALL[3]	ALL[3]	N/A
600S, 660SJ	0300100527 TO PRESENT[3]	0300100527 TO PRESENT[3]	N/A
660SJ 1000-LB	ALL[3]	ALL[3]	N/A
600S HC3, 660SJ HC3	ALL[3]	ALL[3]	N/A
670SJ SL	ALL[3]	ALL[3]	N/A
800A/AJ	0300100617 TO PRESENT[3]	N/A	0300100617 TO PRESENT[3]
800AJ HC3	ALL[3]	N/A	ALL[3]
800S, 860SJ	0300100614 TO PRESENT[3]	0300100614 TO PRESENT3	N/A
800S HC3, 860SJ HC3	ALL[3]	ALL3	N/A
1200SJP, 1350SJP	0300162808 TO PRESENT[3]	N/A	N/A
1500AJP	ALL[3]	N/A	N/A
1500SJ	ALL[3]	N/A	N/A

Note: Kits applicable in ANSI, ANSI Export, CSA, Japan, Australia and China specification regions unless otherwise noted.

[1] ANSI specification region only

[2] ANSI, ANSI Export Spec, CSA, Japan and China specifications

[3] ANSI, ANSI Export Spec, CSA, Australia and China specifications only

Prohibited Options/Items:

- Four Corner Platform Lights
- Pipe Racks
- SkyGlazier
- Platform Mesh to Mid Rail
- Platform Mesh to Top Rail
- Soft Touch
- Platform Top Rail Extension

PROCEED TO STEP 2 >>>

ORDER TODAY | onlineexpress.jlg.com | Parts@jlg.com

PN 401003 | R0926_01

JLG INDUSTRIES, INC.
Toll-free US 877-JLG-LIFT
JLG.com

An Oshkosh Corporation Business

BOLT-ON EXTERNAL FALL ARREST SYSTEM
BOOM ACCESSORIES

STEP 2: IDENTIFY PLATFORM

IF MACHINE DOES NOT FALL WITHIN THE SERIAL NUMBER RANGES LISTED IN STEP 1, STOP, BOLT-ON EXTERNAL FALL ARREST SYSTEM IS NOT COMPATIBLE.

Platform must be equipped with Left Side Swing Gate option. Not compatible with platforms having Left Side Drop Bar entry gate. Machines with a Left Side Drop Bar entry gate require the purchase of the Swing Gate Conversion Kit.

Platform must have Hand Rail design (B); shown.
Bolt-On External Fall Arrest System WILL NOT mount on platforms with Hand Rail design (A): shown. If you have design (A), you must purchase the most current 36-in (91-cm) wide side entry platform available for your machine.

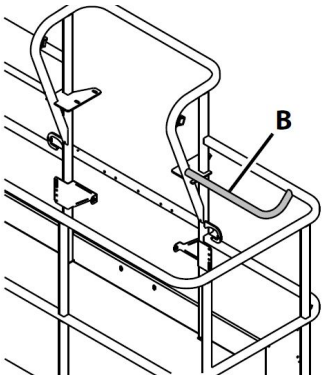

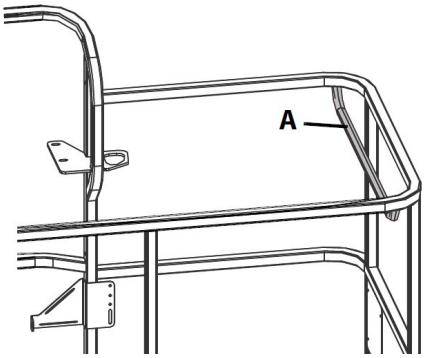

FOR 36-IN PLATFORMS ONLY

PLATFORM HANDRAIL		SWING GATE PLATFORM P/N TO REPLACE PLATFORM A
STYLE A	REQUIRES PURCHASE OF NEW PLATFORM	6-FT (72-IN) (183-CM)
		1001186384S
		8-FT (96-IN) (244-CM)
		1001186383S
STYLE B	DETERMINE ENTRY GATE STYLE	DROP BAR
		REQUIRES PURCHASE OF SWING GATE CONVERSION KIT: P/N 1001142505
		SWING GATE
		NO ADDITIONAL PURCHASE REQUIRED

FOR 30-IN PLATFORMS ONLY

PLATFORM WITH DROP BAR	REQUIRES PURCHASE OF NEW PLATFORM	SWING GATE PLATFORM P/N TO REPLACE DROP BAR PLATFORM		
		48-IN (4-FT) (121-CM)	60-IN (5-FT) (152-CM)	72-IN (6-FT) (183-CM)
		1001186387S	1001186386S	1001186385S

PROCEED TO STEP 3 >>>

ORDER TODAY | onlineexpress.jlg.com | Parts@jlg.com

PN 401003 | R0926_01

JLG INDUSTRIES, INC.
Toll-free US 877-JLG-LIFT
JLG.com

An Oshkosh Corporation Business

BOLT-ON EXTERNAL FALL ARREST SYSTEM
BOOM ACCESSORIES

STEP 3: CHOOSE YOUR FALL ARREST PLATFORM

IF MACHINE DOES NOT FALL WITHIN THE SERIAL NUMBER RANGES LISTED IN STEP 1, STOP, BOLT-ON EXTERNAL FALL ARREST SYSTEM IS NOT COMPATIBLE.

Choose your Bolt-On External Fall Arrest Kit according to the chart below.

PLATFORM SIZE	FALL ARREST KIT P/N
36-IN X 72-IN (91-CM X 183-CM)	1001237883
36-IN X 96-IN (91-CM X 244-CM)	1001237882
30-IN X 48-IN (76-CM X 121-CM)	1001269630
30-IN X 60-IN (76-CM X 152-CM)	1001269629
30-IN X 72-IN (76-CM X 183-CM)	1001269631

JLG INDUSTRIES, INC.
Toll-free US 877-JLG-LIFT
JLG.com
An Oshkosh Corporation Business