ERT4069

SCISSOR LIFT

ELECTRIC POWERED ROUGH TERRAIN SERIES

KEY SPECS

Platform Height
40-ft 3-in / 12.3-m

Machine Width
69.3-in / 1.76-m

Platform Capacity
800-lb / 363-kg

Stowed Drive Speed
3.5 mph / 5.6 km/h

KEY FEATURES

- Electric powered rough terrain models offer drive capability at full height, limiting unnecessary trips up and down for working professionals.
- As the largest platform size in its class, you can bring more operators and tools to the job.
- Delivers the latest technology, featuring an LCD platform control box with LiftSense technology and USB charging for next-level, real-time productivity and service communication to the operator.
- Utilizes higher part commonality and a maintenance-free 2WD AC drive system for simplified service across the rough terrain family.

ACCESSORIES & OPTIONS

- 8 x 6V, 310 Amp Hr Batteries
- Generator Set (Kubota Stage V OC60-E4) 6hp (4.5kW)
- Genset, Range Extending
- Heavy Duty Pipe Racks
- Hydraulic Leveling Jacks (Auto Level)*
- JLG CleanGuard Leak Containment System
- Operator Access Control
- Platform Worklights
- Second Flashing Amber Beacons - LED
- SkySense® Enhanced Detection System
- Special Hydraulic Fluids
- Special Paint
- White Noise Backup Alarm

*Machine pictured features optional hydraulic leveling jacks.

STANDARD SPECIFICATIONS

Performance	Indoor	Outdoor
Platform Height–Elevated	40-ft 3-in / 12.3-m	40-ft 3-in / 12.3-m
Platform Height–Lowered	4-ft 10-in / 1.5-m	4-ft 10-in / 1.5-m
Platform Capacity	800-lb / 363-kg	800-lb / 363-kg
Capacity on Platform Extension	300-lb / 136-kg	300-lb / 136-kg
Number of Occupants	3	2
Lift / Lower Time	69/46 seconds	69/46 seconds
Maximum Drive Height	Fully Elevated	Fully Elevated
Weight w/One Extension*	10,558-lb / 4,799-kg	10,558-lb / 4,799-kg
Ground Bearing Pressure	44 psi / 3.09 kg/cm2	44 psi / 3.09 kg/cm2
Drive Speed–Lowered	3.5 mph / 5.6 km/h	3.5 mph / 5.6 km/h
Drive Speed–Raised	0.3 mph / 0.48 km/h	0.3 mph / 0.48 km/h
Gradeability	35%	35%
Max Tilt Rating - Side-to-Side	2.5 Degrees	2.5 Degrees
Max Tilt Rating - Fore and Aft	3 Degrees	3 Degrees
Turning Radius - Inside	83-in / 2-m	83-in / 2-m
Turning Radius - Outside	175-in / 4.44-m	175-in / 4.44-m

* Certain options or country standard will increase weight.

Power Source	
Drive (2WD)	AC Electric Drive
Batteries	8 x 6V 310 Ah

Tires	
Standard	26-in x 12-in Foam-filled Non-Marking
Optional	26 x 12 Foam-Filled Lug Tread
Optional	26 x 12 Foam Filled Turf

Hydraulic System	
Capacity	13.2 gal / 50 L

STANDARD FEATURES

- 110V-AC Receptacle In Platform
- 2WD AC Drive System
- 23 Amp Automatic, SCR Battery Charger
- 42-in Roll-out Deck Extension
- All Motion Alarm
- ClearSky Smart Fleet™ Hardware (CS550)
- Descent Alarm
- Full Time Traction Control
- Horn
- Hourmeter
- LCD Display with LiftSense System
- LED Motion/Amber Beacon (CS550)
- Lubrication-Free Scissor Arm Bushings
- Manual Descent Pull Cable1
- Moveable, Removable Platform Console Box
- Nickel Plated Pins, Yellow Zinc-Chromate Plated Fasteners
- Oscillating Front Axle
- Pin-Less Fold Down Rail System
- Pin-based Load Sensing System
- Platform Control Box with LCD Display
- Proportional Lift and Drive
- Self-closing Gate
- Scissor Maintenance Prop
- Telematics-Ready Harness
- Tie Down Lugs
- USB Charger and Phone Holster

ERT4069

SCISSOR LIFT

ELECTRIC POWERED ROUGH TERRAIN SERIES

DIMENSIONS

All dimensions are approximate

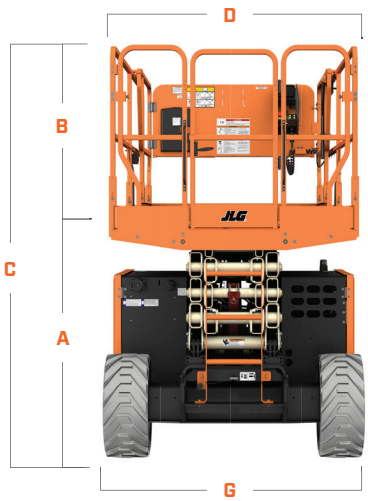

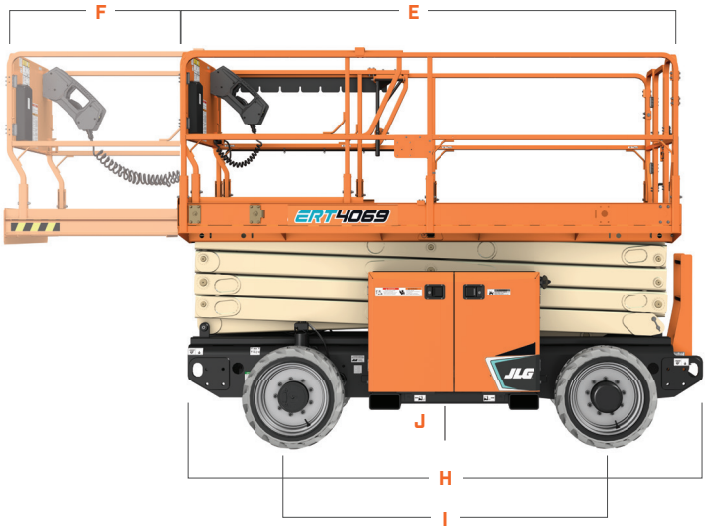

A. Platform Height – Lowered	4-ft 10-in / 1.46-m	**F.** Platform Extension	42-in / 1.07-m
B. Platform Railing Height	44.7-in / 1.14-m	**G.** Machine Width	69.3-in / 1.76-m
C. Machine Height	103-in / 2.62-m	**H.** Machine Length	139-in / 3.53-m
D. Platform Width	63-in / 1.6-m	**I.** Wheelbase	81.3-in / 2.07-m
E. Platform Length	130.5-in / 3.3-m	**J.** Ground Clearance	10.1-in / 25.7-cm

THE JLG 1&5 WARRANTY

We provide coverage for one (1) full year, and cover all specified major structural components for five (5) years. Due to continuous product improvements, we reserve the right to make specification and/or equipment changes without prior notification. This machine meets or exceeds applicable ANSI and CSA requirements based on machine configuration as originally manufactured for intended applications. Please reference the serial number plate on the machine for additional information.

JLG INDUSTRIES, INC.
Toll-free US 877-JLG-LIFT
JLG.com

An Oshkosh Corporation Business

Part No. 3131525 | R0626_05