25AM
ACCESSMASTER®
PUSH-AROUND VERTICAL

VERTICAL MAST LIFT

KEY SPECS

Platform Height
25-ft 2-in / 7.67-m

Machine Width
29.5-m / 75-cm

Platform Capacity
350-lb / 160-kg

Weight*
825-lb / 374-kg - AC
905-lb / 411-kg - DC

KEY FEATURES

- Ideal choice for a low-cost solution to overhead work and maintenance applications.
- Optimum operator comfort and stability with the most rigid mast in the industry.
- Improved maneuverability thanks to six-wheel design.
- More productivity with long battery duty cycles and an automatic charger.

ACCESSORIES & OPTIONS

- 12V 100 Ah AGM Battery
- 22 x 22-in Gullwing Platform
- 26 x 26-in Right Side Entry Platform
- Amber Beacon
- Auxiliary Lowering
- Crane Hook
- Flourescent Tube Caddy
- Locking Casters
- Programmable 4-Digit Security Lock
- Tool Tray
  8 x 18 x 5-in (20 x 46 x 13-cm)

STANDARD SPECIFICATIONS

Performance	Indoor Only
Platform Height	25-ft 2-in / 7.67-m
Working Height	31-ft / 9.45-m
Platform Capacity	350-lb / 160-kg
Distance to Wall (Front)	6-in / 15.5-cm
Distance to Wall (Side)	11.5-in / 28.9-cm
Weight (AC)*	825-lb / 374-kg
Weight (DC)*	905-lb / 411-kg

*Certain options or country standards increase weight

Power Source	
Batteries	12V 93 Amp hr (DC Only)
Battery Charger	Automatic (DC Only)

Wheels	
Rear Wheels	10 x 2-in / 25 x 5-cm
Front Caster Wheels	6 x 2-in / 15 x 5-cm

STANDARD FEATURES

- 26 x 28-in (66 x 71-cm) —Gull-Wing Entry Platform
- 93 AH Lead-Acid Battery—DC Models Only
- 110 Volt Double Receptacle in Platform
- Auto Power Saver—Shuts Off Power When Idled
- Automatic Battery Charger—DC Models Only
- Battery Discharge Indicator (BDI)
- Descent Alarm
- Hourmeter
- Lanyard Attachment Anchor for Body Harness
- Low Maintenance Anodized Mast with 5 Times the Life of Previous Models
- Non-Marking Tires
- Quick-Change Platform Mounts
- Roller Loading Device: For Loading on Pickup Trucks

25AM
ACCESSMASTER®
PUSH-AROUND VERTICAL

VERTICAL MAST LIFT

DIMENSIONS

All dimensions are approximate

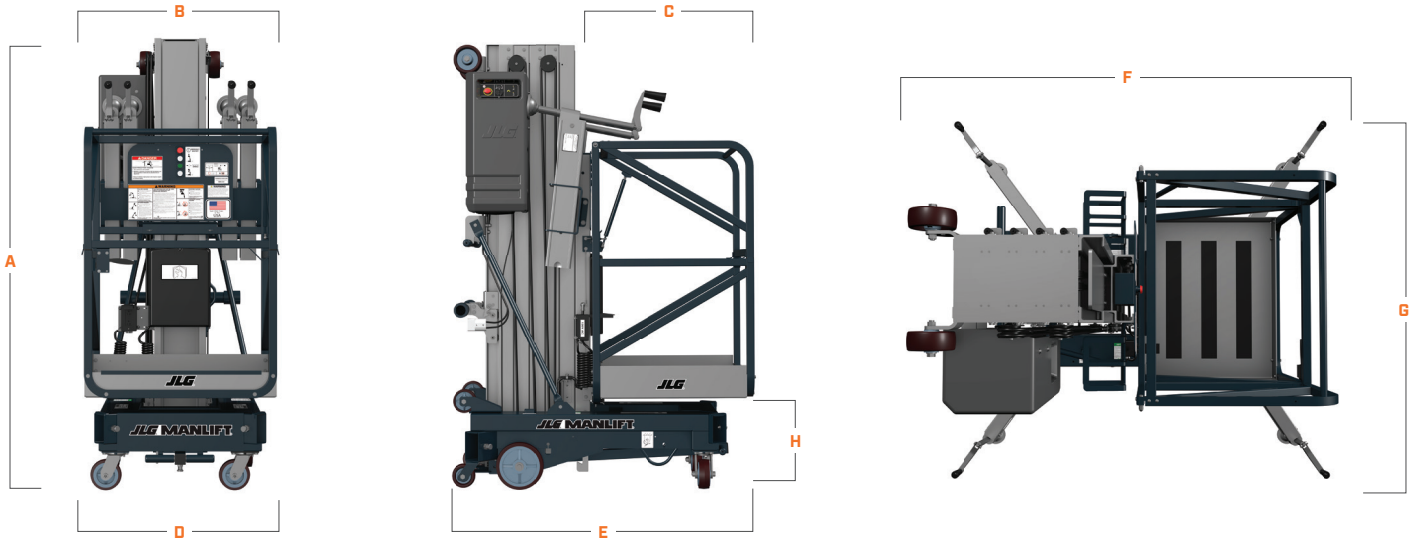

A.	Machine Height	77-in / 1.96-m
B.	Platform Width	28-in / 71-cm
C.	Platform Length	26-in / 66-cm
D.	Machine Width	29.5-in / 75-cm
E.	Machine Length	48-in / 1.22-m
	Machine Length without Battery Pack	47-in / 1.19-m
F.	Outrigger Length	67.87-in / 1.72-m
G.	Outrigger Width	62-in / 1.57-m
H.	Ground Entry Height	16.5-in / 42-cm

THE JLG 1&5 WARRANTY

We provide coverage for one (1) full year, and cover all specified major structural components for five (5) years. Due to continuous product improvements, we reserve the right to make specification and/or equipment changes without prior notification. This machine meets or exceeds applicable ANSI and CSA requirements based on machine configuration as originally manufactured for intended applications. Please reference the serial number plate on the machine for additional information.

JLG INDUSTRIES, INC.
Toll-free US 877-JLG-LIFT
JLG.com

An Oshkosh Corporation Business

Part No. 3132143 | R0626_03